OPERATION – INSTALLATION – PARTS MANUAL

fostoria® SUN-MITE®

*Quality Since 1917*

ELECTRIC INFRARED HEATERS

***MODEL & PART NO.'S:***

**CH-622-1A** (04859102) **CH-1322-1A** (04858902)
**CH-638-3A** (04859002) **CH-1338-3A** (04858802)

WARNING! **DO NOT ATTEMPT TO INSTALL, OPERATE, OR SERVICE THIS PRODUCT BEFORE READING ALL INSTRUCTIONS CAREFULLY. FAILURE TO COMPLY WITH THESE INSTRUCTIONS COULD RESULT IN FIRE, PERSONAL INJURY AND/OR PROPERTY DAMAGE! RETAIN INSTRUCTIONS FOR FUTURE REFERENCE**.

## DESCRIPTION

These Fostoria electric infrared heaters provide safe, efficient electric infrared heat for total area heating, or spot heating applications for warehouses, steel mills, machine shops and many other industrial applications. Infrared is ideal in high vibration atmospheres.

Units do not release fumes, gases, moisture or vapors into the atmosphere. Consume up to 40% to 50% less energy than conventional forced-air systems.

## REQUIRED CLEARANCE

**RECOMMENDED MOUNTING HEIGHTS ARE 10 TO 14 FT. FOR 6 KW MODELS, AND 12 TO 16 FT. FOR 13.5 KW MODELS.**

**FIXTURES MUST BE MOUNTED A MINIMUM OF 36" FROM A VERTICAL SURFACE, A MINIMUM OF 24" FROM A CEILING AND A MINIMUM OF 36" APART. ANY COMBUSTIBLE SURFACE OR OBJECT SHOULD BE AT LEAST 72" AWAY FROM DIRECT RADIATION FROM THIS UNIT.**

## SPECIFICATIONS

| Heater Model | KW | VOLTS | AMPS | PH | RECOMMENDED CABLE SIZE | DIMENSIONS | | |
|---|---|---|---|---|---|---|---|---|
| | | | | | | LENGTH | WIDTH | DEPTH |
| CH-622-1A | 6 | 220 | 27.3 | 1 | 10/3 AWG | 28 1/2” | 20” | 7 1/2” |
| CH-638-3A | 6 | 380 | 9.1 | 3 | 12/4 AWG | | | |
| CH-1322-1A | 13.5 | 220 | 61.4 | 1 | 6/3 AWG | 50 1/2” | 20” | 7 1/2” |
| CH-1338-3A | 13.5 | 380 | 20.5 | 3 | 12/4 AWG | | | |

# IMPORTANT SAFETY INFORMATION

**Read all instructions before using this heater.**

1. Make certain that the power source conforms to the electrical requirements of the heater. Disconnect power before installing or servicing. If the power disconnect is out of sight, lock it in the open position and tag it to prevent unexpected application of power. Failure to do so could result in fatal electric shock.

**WARNING: DO NOT DEPEND UPON A THERMOSTAT OR OTHER SWITCH AS THE SOLE MEANS OF DISCONNECTING POWER WHEN INSTALLING OR SERVICING THE HEATER. ALWAYS DISCONNECT POWER AT THE MAIN CIRCUIT BREAKER AS DESCRIBED ABOVE. FAILURE TO DO SO COULD RESULT IN FATAL ELECTRIC SHOCK.**

2. **CAUTION**: Check branch voltage. Heaters should be operated at voltages no higher than the heating elements and the heater are designed for. (Lower voltages, however, pose no problem other than a loss of wattage).

3. This heater is intended ONLY for permanent installation in accordance with the National Electric Code (NEC), all applicable local codes, ordinances, and all sections of this manual. Any variance voids the warranty and may create unsafe conditions. All wiring should be done by a qualified electrician, using copper wire only.

4. Special attention must be given to any grounding information pertaining to this heater. To prevent the risk of electrocution, the heater must be securely and adequately grounded. This should be accomplished by connecting a grounded conductor between the service panel and the green grounding screw provided on the heater. To ensure a proper ground, the grounding means must be tested by a qualified electrician.

5. Do not insert fingers or foreign objects into the heater. Do not block or tamper with the heater in any manner while it is in operation. Do not touch heater while in operation or just after it has been turned off, as some parts may be hot enough to cause injury.

# SAFETY INFORMATION (con't.)

6. This heater is intended for general heating applications ONLY. It must NOT be used in potentially dangerous locations such as flammable, explosive, chemical-laden, or wet atmospheres.
7. Do not attach ductwork to this heater or attempt to use it as a make-up air heater. Such use voids the warranty and may create unsafe conditions.
8. In cases in which property damage may result from malfunction of the heater, a backup system or a temperature sensitive alarm should be used.
9. If the metal sheath (metal rod element) has an obvious "bowing", an over-voltage/over-temperature condition exists. In case of a bowing condition, de-energize the heater immediately and contact the factory.
10. Heaters are not intended and are not safe for process heating applications.

## INSTALLATION

**NOTE: Heavy-duty heaters are listed for suspended ceiling mounting, and horizontal mounting only.**

**FOR RECOMMAND MOUNTING HEIGHTS REFER TO PAGE 1, SECTION "REQUIRED CLEARANCE"**

Fixtures must be suspended by 14 or 16 gauge hardware chain and "S" hooks. The hooks are mounted to the holes on the "L" shaped brackets on the top of the heater; or rigid mounted with angle iron, etc.--supplied by others. (See Mounting Centers below.)

NOTE: Heater should normally be installed for horizontal operation. Make final mounting adjustments to keep the wiring compartment EVEN WITH, OR LOWER THAN, the horizontal plane.

| MOUNTING CENTERS | | |
|---|---|---|
| | 6 KW | 13.5 KW |
| BRACKET TO BRACKET | 16-1/8" | 36-1/2" |
| HOLE SPACING ON BRACKET | 12-3/4" | 12-3/4" |

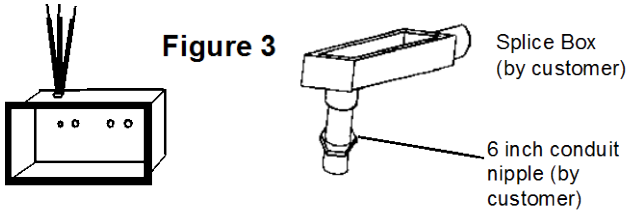


**Figure 3**

## OPERATION

NOTE: It is normal for any high intensity heater to create some expansion or contraction noises during heat-up and cool-down cycles.

CONTROL: A variety of control devices may be used for operation of this heater. Heater should be wired to an approved contactor (or Fostoria contactor panel), which energizes the heater in response to a thermostat, percentage timer, or ON/OFF switch, etc.

## IMPORTANT SAFETY INSTALLATION DATA

All metal sheathed heating elements MUST be protected by ground fault circuit interrupting breakers and/or fast acting fuses (see below) sized as close as possible to the amps shown on the data plate. Failure to comply could result in electrocution, building fire or equipment damage.

| Gould-Shawmut | | Buss | |
|---|---|---|---|
| ATM | A4J | KTS-R | KTN-R |
| A2K | A6K | KTK | JKS |

## WIRING

1. Remove cover from heater terminal box (Fig. 3) and install 6-inch conduit nipple and splice box (both customer supplied).
2. Select wiring mode: single or three-phase.
3. Place silicone lead wires from heater terminal box through conduit and connect to supply wiring inside splice box (supplied by customer).
4. Follow local and national electric codes. Use 90ºC rated supply wire indicated on the SPECIFICATIONS table, see page 1.

3-PHASE WIRING

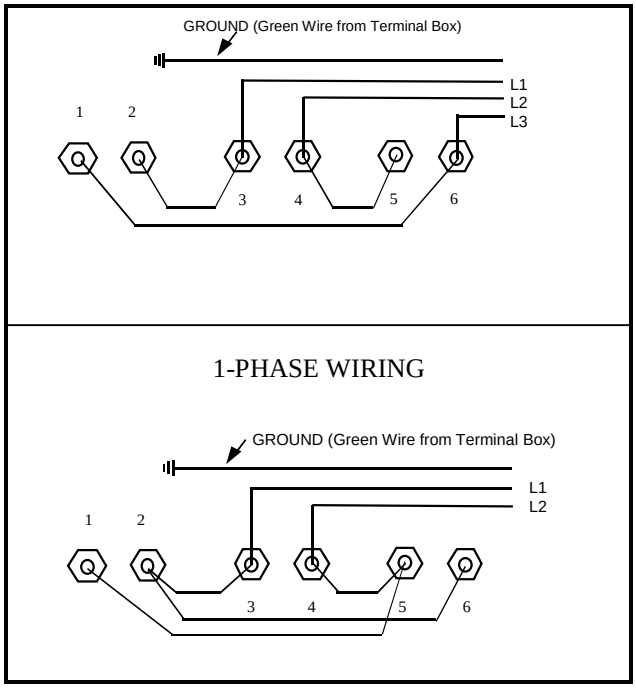


## MAINTENANCE

Blow dust off the elements and inner reflectors prior to heating season, and more often in dusty environments.

# REPLACEMENT PARTS LIST and EXPLODED VIEW

6 KW MODELS

| REF NO. | DESCRIPTION | PART NO. | QTY. |
|---|---|---|---|
| 1 | Housing assembly | 8828099 | 1 |
| 2 | Extrusion | 8041700 | 3 |
| 3 | Terminal box | 8040802 | 1 |
| 4 | Terminal box cover | 8040900 | 1 |
| 5 | Reflector | 8048900 | 3 |
| 6 | Metal rod support | 8024100 | 3 |
| 7 | 3/8-16 x 1/2 hex hd. screw | 3474300 | 6 |
| 8 | 3/8-16 jam nut | 3429100 | 6 |
| 9 | 8-32 x 1/2 hex hd. washer screw | 3444456 | 4 |
| 10 | 8 x 1/2 hex hd. screw | 3470800 | 4 |
| 11 | 10-32 x 3/8 hex hd. screw | 3475000 | 1 |
| 12 | U-shaped metal rod element | See chart | 3 |
| 13 | Wire assy. BLK | See chart | 2 |
| 14 | Wire assy. GRN | See chart | 1 |
| 15 | Buss Bar | See chart | 2 |

13.5 KW MODELS

| REF NO. | DESCRIPTION | PART NO. | QTY. |
|---|---|---|---|
| 1 | Housing assembly | 8828599 | 1 |
| 2 | Extrusion | 8042400 | 3 |
| 3 | Terminal box | 8040802 | 1 |
| 4 | Terminal box cover | 8040900 | 1 |
| 5 | Reflector | 8049000 | 3 |
| 6 | Metal rod support | 8024100 | 6 |
| 7 | 3/8-16 x 1/2 hex hd. screw | 3474300 | 12 |
| 8 | 3/8-16 jam nut | 3429100 | 12 |
| 9 | 8-32 x 1/2 hex hd. washer screw | 3444456 | 4 |
| 10 | 8 x 1/2 hex hd. screw | 3470800 | 4 |
| 11 | 10-32 x 3/8 hex hd. screw | 3475000 | 1 |
| 12 | U-shaped metal rod element | See chart | 3 |
| 13 | Wire assy. BLK | See chart | 2 |
| 14 | Wire assy. GRN | See chart | 1 |
| 15 | Buss bar | See chart | 2 |

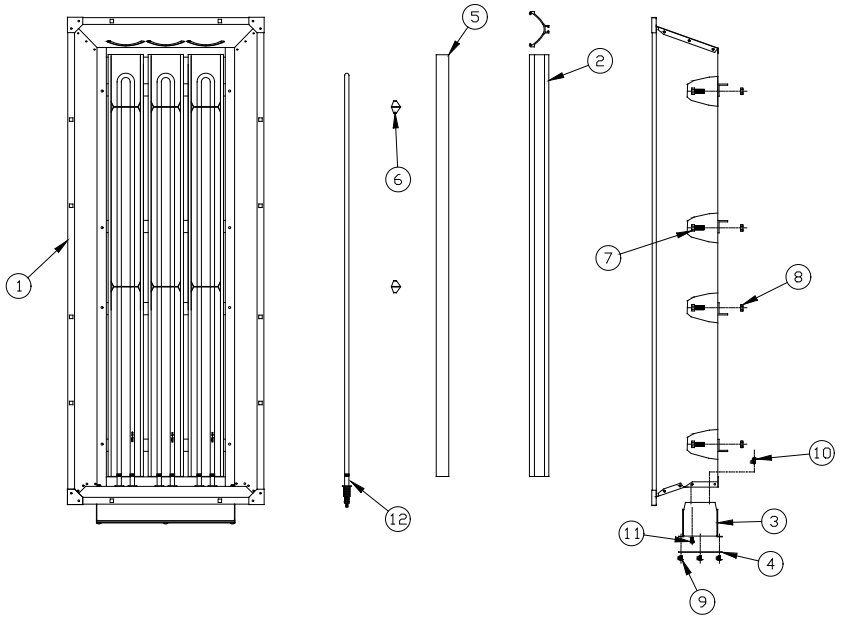


| Heater Model | Leadwire Item #13 | Ground wire Item #14 | Buss Bar Item #15 | Element Item #12 |
|---|---|---|---|---|
| CH-622-1A | 3160301 | 3160704 | 2415001 | 04860702 |
| CH-638-3A | 3160633 | 3160704 | 2415000 | 04860802 |
| CH-1322-1A | 6160301 | 3160704 | 2415001 | 04860902 |
| CH-1338-3A | 6160633 | 3160704 | 2415000 | 04861002 |

# WARRANTY

FOSTORIA INDUSTRIES, INC. – 1200 N. Main St. - Fostoria, Ohio 44830 - (419) 435-9201

The warranty herein set forth is in lieu of all other warranties expressed or implied.

Fostoria Industries, Inc. of Fostoria, Ohio 44830, warrants its products to the owner against defects in material and workmanship for a twelve (12) month period under normal use and service following date of manufacture or installation when proof of such is provided to seller.

This Warranty requires that the owner, or his agent, install the equipment in accordance with the National Electrical Code, any other applicable heating or electrical codes and the manufacturer's installation instructions. It further requires that he perform reasonable and necessary maintenance on the unit. The company is not liable for abuse or misuse of product as may be finally determined by the company.

The obligation of Fostoria Industries, Inc. under the terms of this warranty, shall be to supply a new part, repair of defective part, or a refund, at the company's option with no cost to owner for the new or repaired part. Such parts are to be returned to the factory, or such other location as the company may designate. This warranty does not obligate Fostoria Industries, Inc. to bear the cost of labor in replacing any assembly, unit or component part thereof, nor does the company assume any liability for secondary charges, expenses for installing or removal, or any other consequential losses. The company's maximum liability shall not in any case exceed the list price for the product claimed to be defective.

The warranty shall not apply to any product or parts of products which have been repaired or altered outside of Seller's factory in any manner. Warranty is void on products that have been determined to have been subjected to misuse, negligence or accident or which have been used in a manner contrary to Seller's instructions.