OPERATION – INSTALLATION – PARTS MANUAL

fostoria® SUN-MITE®
Quality Since 1917

ELECTRIC INFRARED HEATERS

***MODEL & PART NO.'S:***

**CH-2738-3B** (04864202)
TPI Corporation
P.O. Box 4973
Johnson City, TN 37602

WARNING! **DO NOT ATTEMPT TO INSTALL, OPERATE, OR SERVICE THIS PRODUCT BEFORE READING ALL INSTRUCTIONS CAREFULLY. FAILURE TO COMPLY WITH THESE INSTRUCTIONS COULD RESULT IN FIRE, PERSONAL INJURY AND/OR PROPERTY DAMAGE! RETAIN INSTRUCTIONS FOR FUTURE REFERENCE**.

## DESCRIPTION

These Fostoria electric infrared heaters provide safe, efficient electric infrared heat for total area heating, or spot heating applications for warehouses, steel mills, and many other high-bay industrial applications. Infrared is ideal in high vibration atmospheres.

Units do not release fumes, gases, moisture or vapors into the atmosphere. Consume up to 40% to 50% less energy than conventional forced-air systems.

## REQUIRED CLEARANCE

**Fixtures must be mounted a minimum of 36" from a vertical surface, a minimum of 24" from a ceiling and a minimum of 36" apart. Any surface or object should be at least 87" away from direct radiation from this unit.**

## SPECIFICATIONS

*Reflector Housing*…….. .040 Gold Anodized Aluminum

*Reflector Insert*…….. .032 BOS Aluminum

*Reflector Extrusion*……. Extra heavy aluminum extrusion w/ front edge grooved to hold reflector insert.

*Wiring*…...Factory wired for 3PH operation w/ high temperature silicone wire, for easy connection to customer supply wiring.

*Dimensions*……..……96-3/4"L x 28-1/4"W x 14- 7/8"D

*Power requirements* ……..380V – 3PH – 74.8 Amps – 27KW

## IMPORTANT SAFETY INFORMATION

**Read all instructions before using this heater.**

1. Make certain that the power source conforms to the electrical requirements of the heater. Disconnect power before installing or servicing. If the power disconnect is out of sight, lock it in the open position and tag it to prevent unexpected application of power. Failure to do so could result in fatal electric shock.

**WARNING: DO NOT DEPEND UPON A THERMOSTAT OR OTHER SWITCH AS THE SOLE MEANS OF DISCONNECTING POWER WHEN INSTALLING OR SERVICING THE HEATER. ALWAYS DISCONNECT POWER AT THE MAIN CIRCUIT BREAKER AS DESCRIBED ABOVE. FAILURE TO DO SO COULD RESULT IN FATAL ELECTRIC SHOCK.**

2. This heater is intended ONLY for permanent installation in accordance with the National Electric Code (NEC), all applicable local codes and ordinances, and all sections of this manual. Any variance voids the warranty and may create unsafe conditions. All wiring should be done by a qualified electrician, using copper wire only.

3. Special attention must be given to any grounding information pertaining to this heater. To prevent the risk of electrocution, the heater must be securely and adequately grounded. This should be accomplished by connecting a grounded conductor between the service panel and the green grounding screw provided on the heater. To ensure a proper ground, the grounding means must be tested by a qualified electrician.

4. Do not insert fingers or foreign objects into the heater. Do not block or tamper with the heater in any manner while it is in operation. Do not touch heater while in operation or just after it has been turned off, as some parts may be hot enough to cause injury.

5. This heater is intended for general heating applications ONLY. **IT MUST NOT BE USED IN POTENTIALLY DANGEROUS LOCATIONS SUCH AS FLAMMABLE, EXPLOSIVE, CHEMICAL-LADEN, OR WET ATMOSPHERES.**

6. Do not attach ductwork to this heater or attempt to use it as a make-up air heater. Such use voids the warranty and may create unsafe conditions.

7. In cases in which property damage may result from malfunction of the heater, a backup system or a temperature sensitive alarm should be used.

8. CAUTION: Check branch voltage. Heaters should be operated at voltages no higher than the heating elements and the heater are designed for. (Lower voltages, however, pose no problem other than a loss of wattage).

9. If metal sheath (metal rod element) has an obvious "bowing", an over-voltage/over-temperature condition exists. In case of a bowing condition, de-energize the heater immediately and contact the factory.

10. Heaters are not intended and are not safe for process heating applications.

**SAVE THESE INSTRUCTIONS**

# IMPORTANT SAFETY INSTALLATION DATA

All metal sheathed heating elements MUST be protected by ground fault circuit interrupting breakers and/or fast acting fuses (see below) sized as close as possible to the amps shown on the data plate. Failure to comply could result in electrocution, building fire or equipment damage.

| Gould-Shawmut | | Buss | |
|---|---|---|---|
| **ATM** | **A4J** | **KTS-R** | **KTN-R** |
| **A2K** | **A6K** | **KTK** | **JKS** |

## WIRING

All heaters are factory wired for three-phase operation. Follow local and national electric codes. Use 90° C rated supply wire.

1. Run the heater wiring through conduit (supplied by customer) to the supply wires in the electrical boxes (supplied by customer).

**Figure 1 - Standard Factory Wiring 3-Phase**

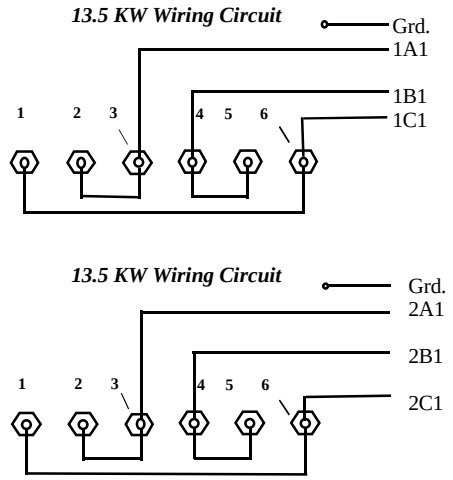


*The 27 KW model wiring consists of (2) 13.5 KW circuits.*

## INSTALLATION

1. Heavy duty heaters are UL listed for suspended ceiling mounting, and horizontal mounting only.

2. Fixtures must be suspended (see Fig. 2) by 12 or 14 gauge hardware chain and "S" hooks which can be mounted in the holes in the "L" shaped brackets on the top of the heater; or rigid mounted with angle iron, etc.- supplied by others.

**NOTE:** Heater should normally be installed for horizontal operation. Make final mounting adjustments to keep the wiring compartments EVEN WITH the horizontal plane.

3. Recommended mounting heights are 15 to 30 feet.

4. **Fixtures must be mounted a minimum of 36" from a vertical surface, a minimum of 24" from a ceiling and a minimum of 36" apart. Any surface or object should be at least 87" away from direct radiation from this unit.**

**Mounting Bracket Dimensions for Suspension Mounting**

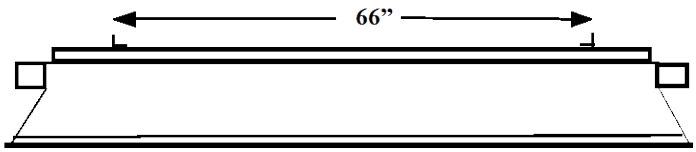


**Figure 2**

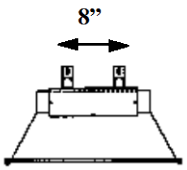


## OPERATING INSTRUCTIONS

NOTE: It is normal for any high intensity heater to create some expansion or contraction noises during heat-up and cool-down cycles. These noises are nothing to be concerned about.

CONTROL: A variety of control devices may be used for operation of this heater. Heater should be wired to an approved contactor (or Fostoria contactor panel) which energizes the heater in response to a thermostat, percentage timer, or ON/OFF switch, etc.

## MAINTENANCE

Blow any dust off of the elements and inner reflectors prior to heating season, and more often in dusty environments.

# REPLACEMENT PARTS LIST and EXPLODED VIEW

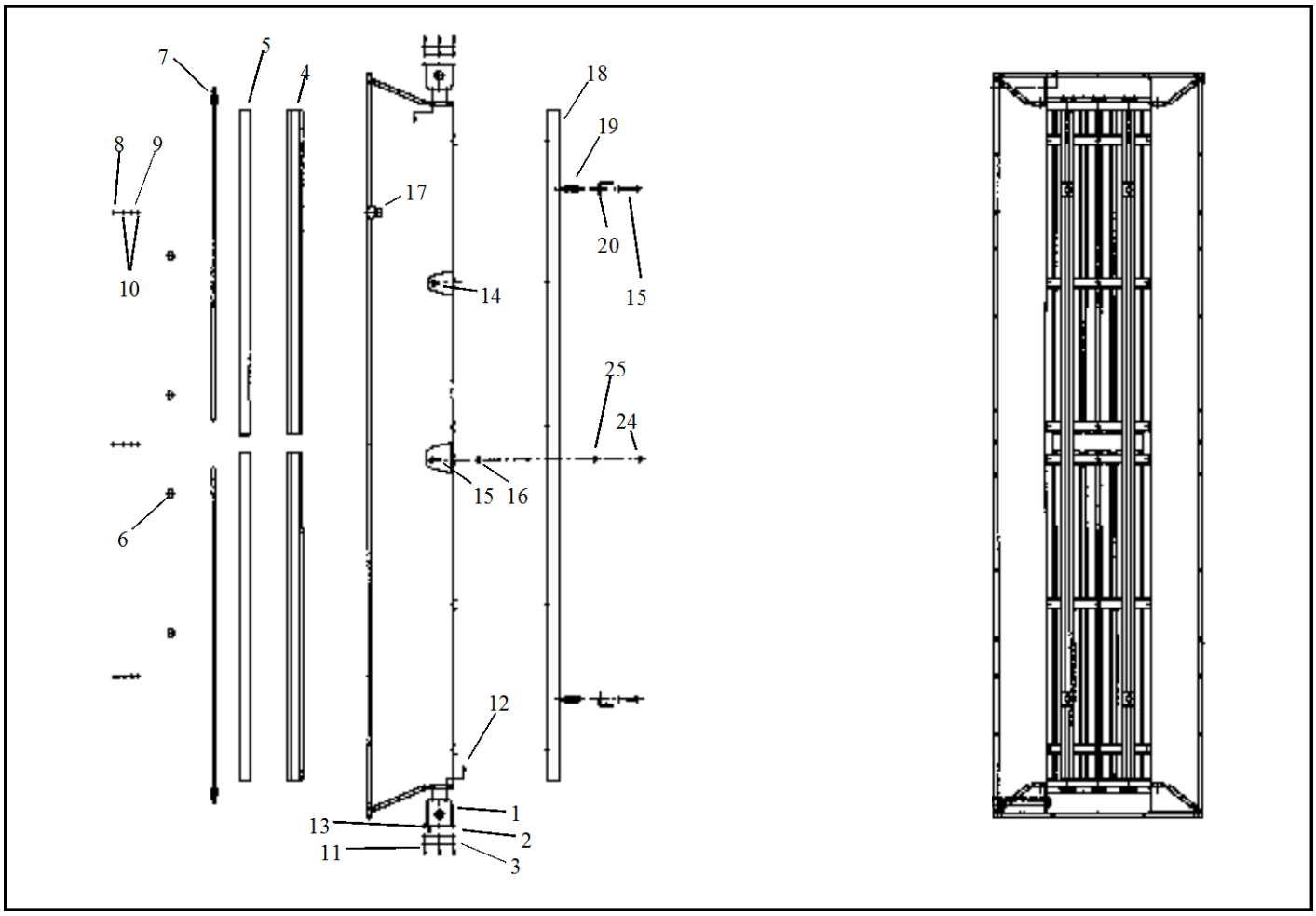


| REF. NO. | DESCRIPTION | PART NO. | QTY. |
|---|---|---|---|
| 1 | Terminal box assembly | 8043402 | 2 |
| 2 | Gasket | 8041000 | 2 |
| 3 | Terminal box cover | 8040900 | 2 |
| 4 | Extrusion 42-1/4" | 8042400 | 6 |
| 5 | Reflector 42-1/4" | 8049000 | 6 |
| 6 | U-shaped rod support assembly | 8024100 | 12 |
| 7 | U-shaped metal rod element | 04861002 | 6 |
| 8 | #10-32 X 5/8" hex wshr. hd. screw | 3403856 | 6 |
| 9 | Housing support bracket | 8023329 | 3 |
| 10 | #10 flat washer Type B | 3400832 | 12 |
| 11 | #8 X 1/2" lg. hex wshr. hd. screw | 5081 | 8 |
| 12 | #8-15 X 1/2" sltd. hex hd. screw | 03470800 | 8 |
| 13 | #10-32 X 3/8" hex hd. screw green | 1458 | 2 |

| REF. NO. | DESCRIPTION | PART NO. | QTY. |
|---|---|---|---|
| 14 | 3/8-16 X 1/2" hex hd. mach. screw | 3474300 | 6 |
| 15 | 3/8-16 X 1" hex hd. mach. screw | 3493900 | 16 |
| 16 | 3/8-16 heavy hex jam nut | 3429100 | 18 |
| 17 | #10-32 self-retaining nut | 3403900 | 6 |
| 18 | Unistrut 86-3/4" long | 8044602 | 2 |
| 19 | 3/8-16 Unistrut nut | 9048530 | 4 |
| 20 | Mounting lug | 8410102 | 4 |
| 21 | | | |
| 22 | | | |
| 23 | | | |
| 24 | 3/8-16 Jam nut | 3429700 | 12 |
| 25 | Flat washer 3/8” | 3425200 | 16 |

NOTE: A replacement inner reflector (reference no. 5) is included with every U-rod element replacement order. Install the new inner reflector when replacing elements.

## ELEMENT REPLACEMENT

1. Remove old element. See Figure 3.

2. To replace an element, insert the U-shaped element through slots in the reflector and through holes in the terminal box.

3. Place gasket over element threads inside terminal box. Then place metal washer and hex nut, and tighten.

4. Replace stakon to tab on the element, to connect the power supply. Replace rod support.

5. Use only Fostoria replacement elements of the same wattage/voltage and part number of the original element.

**WARNING: BE SURE TO TURN OFF POWER TO THE HEATER, OR REMOVE FUSES, TO ENSURE ANOTHER PERSON IN A REMOTE LOCATION CANNOT ENERGIZE THE HEATER WHILE REPLACING ELEMENTS OR PERFORMING ANY OTHER MAINTENANCE OPERATIONS.**

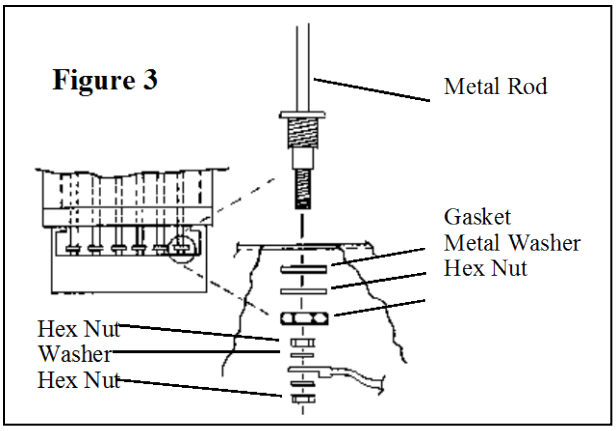


## TROUBLESHOOTING CHART

| SYMPTOM | POSSIBLE CAUSE | CORRECTIVE ACTION |
|---|---|---|
| Element does not energize. | 1. Defective element.<br>2. Improper connection.<br>3. Defective switch.<br>4. Improper connection in terminal box. | 1. Replace element.<br>2. Check connection to outlet. Check power.<br>3. Check switch.<br>4. Check, tighten stakon connections. |
| Not enough heat. | 1. Heater too small for application.<br>2. Heater mounted too high. | 1. Add additional heaters.<br>2. Decrease mounting height. |
| Too much heat. | 1. Heater too large for application.<br>2. Heater mounted too low. | 1. Replace with smaller heater.<br>2. Increase mounting height. |

# *LIMITED WARRANTY*

Products manufactured by TPI Corporation are warranted to the original consumer to be free from defects in material and workmanship for twelve (12) months from the original purchase date.

The TPI limited warranty does not cover products that have been modified outside of our factory, damage or failure caused by acts of God, abuse, misuse, connected to or placed on other than rated voltage, abnormal usage, fault, installation, failure to follow suggested maintenance procedures enclosed with the product, improper maintenance or any repairs other than those provided by an authorized TPI service center.

**There are no obligations or liabilities on the part of the Corporation for consequential damages arising out of or in connection with the use or performance of the product or other indirect damages with respect to loss of property, revenues, profit, costs of removal installation, or reinstallation.**

**All implied warranties with respect to TPI products, including implied warranties for merchantability and implied warranties for fitness, are limited in duration to twelve (12) months from original date of purchase, except those products or parts of products which are warranted for long periods thereon.**

Some states do not allow the exclusions or limitation of incidental or consequential damages and some states do not allow limitations on how long an implied warranty lasts. The above exclusions or limitations may not apply to you.

During the warranty period, TPI Corporation will, at its sole option, repair or replace any defective parts or products returned, freight prepaid, to the TPI Corporation factory or such other locations as TPI Corporation may designate. Returned products must be packaged carefully and TPI Corporation shall not be responsible for damage in transit.

When returning parts, the owner must provide the model number of the product and nature of difficulty being experienced. This warranty does not obligate TPI Corporation to bear the cost of labor in replacing any assembly, unit or component part thereof, nor does the company assume any liability for secondary charges, expenses for installing or removal, freight or damages. There will be charges rendered for product repairs made after the warranty period has expired. Proof of purchase, including date, must accompany request for in-warranty service. In any event, TPI Corporation's maximum liability shall not in any case exceed the list price for the product claimed to be defective. This warranty gives to you specific legal rights and you may have other rights, which may vary from state to state. For the name of your nearest authorized TPI Corporation service center, please write to TPI Corporation, P.O. Box 4973, Johnson City, TN 37602.

| HEATING PRODUCTS WARRANTY COVERAGE | |
|---|---|
| Heating Products Elements in Baseboards | 10 Years |
| All other Heating Products | 1 Year |
| Thermostats and Controls | 2 Years |

| VENTILATION PRODUCTS WARRANTY COVERAGE | |
|---|---|
| Series HD or HDH Fans | 5 Years |
| Series UHP or IHP Fans | 3 Years |
| All other Ventilation Products | 1 Year |