3900 Series Hydronic Electric Baseboard Heater

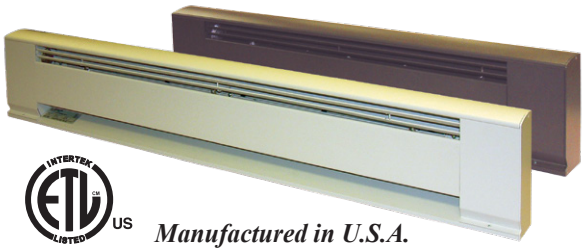

Manufactured in U.S.A.

- Permanent mount self contained unit.
- Heating elements are immersed in a heat transferring liquid enclosed by a Copper tube casing with Aluminum fins.
- Powder coated 12 Gauge heavy duty extruded Aluminum housing with junction boxes located on each end of the unit.
- Automatic linear limit.
- Wire guard extends along the entire outlet area of the baseboard.
- Commercial Brown unit has in-built wireway.
- Special colors available, consult factory.
- Suitable for high altitude applications.
- 1 Year element warranty.

Standard Models

STANDARD WHITE		COMMERCIAL BROWN		WATTS	BTU's.	VOLTS	AMPS	HEATER LENGTH (IN.)	WT. (LBS)	WHITE LIST	BROWN LIST
UPC 686334	MODEL	UPC 686334	MODEL								
111416	E3904-28	111645	E3904-28C	400	1360	120	3.3	28	16	309	328
111423	F3904-28	111652	F3904-28C	400	1360	208	1.92				
111430	H3904-28	111669	H3904-28C	400/300	1360/1024	240/208	1.6/1.4				
111447	G3904-28	111676	G3904-28C	400	1360	277	1.4				
111454	E3906-36	111683	E3906-36C	600	2048	120	5	36	22	353	376
111461	F3906-36	111690	F3906-36C	600	2048	208	2.9				
111478	H3906-36	111706	H3906-36C	600/450	2048/1536	240/208	2.5/2.2				
111485	G3906-36	111713	G3906-36C	600	2048	277	2.2				
111492	E3910-48	111720	E3910-48C	1000	3413	120	8.3	48	27	411	437
111508	F3910-48	111737	F3910-48C	1000	3413	208	4.8				
111515	H3910-48	111744	H3910-48C	1000/750	3413/2560	240/208	4.2/3.6				
111522	G3910-48	111751	G3910-48C	1000	3413	277	3.6				
111539	E3912-60	111768	E3912-60C	1250	4265	120	10.4	60	33	469	510
111546	F3912-60	111775	F3912-60C	1250	4265	208	6				
111553	H3912-60	111782	H3912-60C	1250/938	4265/3201	240/208	5.2/4.5				
111560	G3912-60	111799	G3912-60C	1250	4265	277	3.6				
111577	E3915-72	111805	E3915-72C	1500	5100	120	12.5	72	41	527	563
111584	F3915-72	111812	F3915-72C	1500	5100	208	7.2				
111591	H3915-72	111829	H3915-72C	1500/1125	5100/3825	240/208	6.3/5.4				
111607	G3915-72	111836	G3915-72C	1500	5100	277	5.4				
111614	F3920-96	111842	F3920-96C	2000	6826	208	9.6	96	58	625	673
111621	H3920-96	111850	H3920-96C	2000/1500	6826/5100	240/208	8.3/7.2				
111638	G3920-96	111867	G3920-96C	2000	6826	277	7.2				

Product Specifications & Dimensions

The entire heater casing shall be constructed of 6063 extruded Aluminum. minimum thickness of .100" (12 Gauge) Aluminum shall be acceptable. Outlet grill shall cover entire length of air discharge opening and be constructed of steel. All casing and grill construction shall be painted with high quality durable powder coated paint.

The heating element shall be high quality nichrome wire encased in Magnesium Oxide and sealed in copper tube. The heating element shall be sealed in .312" diameter copper tube and be immersed in heat transfer liquid. Aluminum fins shall be mechanically bonded to the entire heated length of the element for even heat transfer.

Linear automatic thermal limit shall extend the entire heater length of element and protect heater in case of an over-temperature condition.

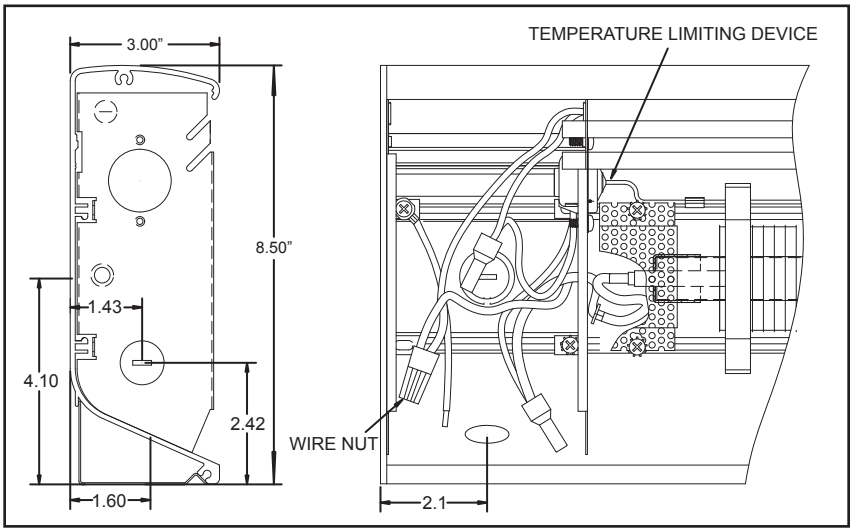

Optional controls shall be mounted in junction box enclosures at either end of heater. Optional integral thermostat shall be located in junction box with adjustment knob or for tamper-proof operation. Optional disconnect switch shall be mounted in junction box. Optional 120 Volt or air conditioning receptacle shall be mounted in junction box. Optional proportional control shall be available with use of R842 relay and T186 microcomputer wall mounted thermostat. The R842 relay shall be mounted in heater junction box.

Optional installation accessories shall include inside and outside corner sections for complete wall perimeter fit. Profile of corners and grill shall have appearance of heat sections for continuous architectural design. Corner accessories and heater sections shall be secured by alignment pins for easy alignment of multiple heater applications.

TPI Corporation TPI Corporation TPI Corporation TPI Corporation TPI Corporation TPI Corporation TPI Corporation

3700 Series Architectural Style Electric Baseboard Heater

- Available in white or brown with stainless steel heating element and aluminum fins.
- Powder coated 12 Gauge heavy duty extruded Aluminum housing construction with junction boxes located on each end of the unit.
- An automatic thermal linear limit is used along the entire heated length of the unit.
- Wire guard extends along the entire outlet area of the baseboard.
- Special colors available, consult factory.

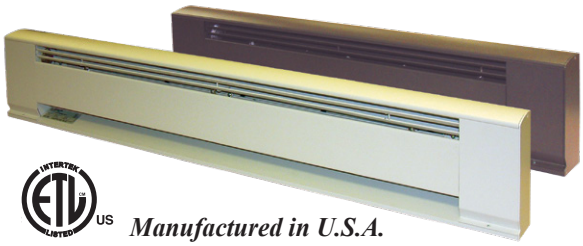

Manufactured in U.S.A.

Standard Models

STANDARD WHITE		COMMERCIAL BROWN									
UPC 686334	MODEL	UPC 686334	MODEL	WATTS	BTU's	VOLTS	AMPS	HEATER LENGTH (IN.)	WT. (LBS.)	WHITE LIST	BROWN LIST
116008	E3703-024	116435	E3703-024B	375	1275	120	3.1	24	14	263	274
116015	F3703-024	116442	F3703-024B	375	1275	208	1.8				
116022	H3703-024	116459	H3703-024B	375 / 281	1275 / 955	240 / 208	1.6/1.4				
116039	G3703-024	116466	G3703-024B	375 / 281	1275 / 955	277 / 240	1.6/1.2				
116046	E3705-028	116473	E3705-028B	500	1706	120	4.2	28	16	291	303
116053	F3705-028	116480	F3705-028B	500	1706	208	2.4				
116060	H3705-028	116497	H3705-028B	500 / 375	1706 / 1275	240 / 208	2.1/1.8				
116077	G3705-028	116503	G3705-028B	500 / 375	1706 / 1275	277 / 240	1.8/1.6				
116084	E3706-036	116510	E3706-036B	600	2040	120	5	36	22	337	349
116091	F3706-036	116527	F3706-036B	600	2040	208	2.9				
116107	H3706-036	116534	H3706-036B	600 / 450	2040 / 1530	240 / 208	2.5/2.2				
116114	G3706-036	116541	G3706-036B	600 / 450	2040 / 1530	277 / 240	2.2/1.9				
116121	E3707-040	116558	E3707-040B	750	2550	120	6.3	40	27	343	354
116138	F3707-040	116565	F3707-040B	750	2550	208	3.6				
116145	H3707-040	116572	H3707-040B	750 / 563	2550 / 1914	240 / 208	3.1/2.7				
116152	G3707-040	116589	G3707-040B	750 / 563	2550 / 1914	277 / 240	2.7.2.6				
116169	E3710-048	116596	E3710-048B	1000	3413	120	8.3	48	31	354	366
116176	F3710-048	116602	F3710-048B	1000	3413	208	4.8				
116183	H3710-048	116619	H3710-048B	1000 / 750	3413 / 2550	240 / 208	4.2/3.6				
116190	G3710-048	116626	G3710-048B	1000 / 750	3413 / 2550	277 / 240	3.6/3.1				
116206	G3707-048	116633	G3707-048B	750	2550	277	3.4				
116213	E3712-060	116640	E3712-060B	1250	4250	120	10.4	60	33	464	475
116220	F3712-060	116657	F3712-060B	1250	4250	208	6				
116237	H3712-060	116664	H3712-060B	1250 / 938	4250 / 3189	240 / 208	5.2/4.5				
116244	G3712-060	116671	G3712-060B	1250 / 938	4250 / 3189	277 / 240	4.5/3.9				
116251	G3709-060	116688	G3709-060B	938	3189	277	3.4				
116268	E3715-072	116695	E3715-072B	1500	5100	120	12.5	72	41	520	531
116275	F3715-072	116701	F3715-072B	1500	5100	208	7.2				
116282	H3715-072	116718	H3715-072B	1500 / 1125	5100 / 3825	240 / 208	6.3/4.7				
116299	G3715-072	116725	G3715-072B	1500 / 1125	5100 / 3825	277 / 240	5.4/4.7				
116305	G3711-072	116732	G3711-072B	1125	3825	277	4.1				
116312	F3717-084	116749	F3717-084B	1750	5950	208	8.4	84	49	583	594
116329	H3717-084	116756	H3717-084B	1750 / 1313	5950 / 4464	240 / 208	7.3/6.3				
116336	G3717-084	116763	G3717-084B	1750 / 1313	5950 / 4464	277 / 240	6.3/5.5				
116343	G3713-084	116770	G3713-084B	1313	4464	277	4.7				
116350	F3720-096	116787	F3720-096B	2000	6826	208	9.6	96	58	634	646
116367	H3720-096	116794	H3720-096B	2000 / 1500	6826 / 5100	240 / 208	8.3/7.2				
116374	G3720-096	116800	G3720-096B	2000 / 1500	6826 / 5100	277 / 240	7.2/6.3				
116381	G3715-096	116817	G3715-096B	1500	5100	277	5.4				
116398	F3725-120	116824	F3725-120B	2500	8532	208	12	120	67	692	703
116404	H3725-120	116831	H3725-120B	2500 / 1875	8532 / 6375	240 / 208	10.4/9.0				
116411	G3725-120	116848	G3725-120B	2500 / 1875	8532 / 6375	277 / 240	9.0/7.8				
116428	G3718-120	116855	G3718-120B	1875	6375	277	6.8				

NOTE: Refer to 3900 Series for product dimension specifications.

Product Specifications

The entire heater casing shall be constructed of 6063 extruded Aluminum. Minimum thickness of .100" (12 Gauge) Aluminum shall be acceptable. Outlet grill shall cover entire length of air discharge opening and be constructed of steel. All casing and grill construction shall be painted with high quality durable powder coated paint.

The heating element shall be high quality nichrome wire encased in Magnesium Oxide and sealed in a stainless steel tube.

Linear automatic thermal limit shall extend the entire heater length of element and protect heater in case of an over-temperature condition.

Optional controls shall be mounted in junction box enclosures at either end of heater. Optional integral thermostat shall be located in junction box with adjustment knob or for tamper-proof operation. Optional disconnect switch shall be mounted in junction box. Optional 120 Volt or air conditioning receptacle shall be mounted in junction box. Optional proportional control shall be available with use of R842 relay and T186 microcomputer wall mounted thermostat. The R842 relay shall be mounted in heater junction box.

Optional installation accessories shall include inside and outside corner sections for complete wall perimeter fit. Profile of corners and grill shall have appearance of heat sections for continuous architectural design. Corner accessories and heater sections shall be secured by alignment pins for easy alignment of multiple heater applications.

TPI Corporation TPI Corporation TPI Corporation TPI Corporation TPI Corporation TPI Corporation TPI Corporation

Hydronic & Architectural Electric Baseboard Heater Accessories

Field Installed Accessories

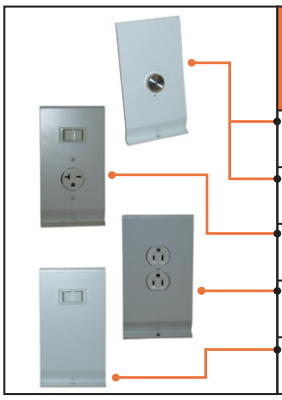

DESCRIPTION	Standard White		Commercial Brown		LIST
	UPC 686334	MODEL	UPC 686334	MODEL	
Single Pole, In-Built T-Stat, 22A @ 120-240V; 18A @ 277V; 50°-90° F	111874	3900T1	111959	3900T1C	53
Double Pole, In-Built T-Stat, 22A @ 120-240V; 18A @ 277V; 50°-90° F	111881	3900T2	111966	3900T2C	70
Air Conditioning Receptacle Section, 20 Amp @ 125-277V	111898	3900AC	111997	3900ACC	63
120V. Receptacle Section, 15 Amp	111904	3900REC	112000	3900RECC	59
Disconnect Switch, 20 Amp @ 125-277VAC; DPST	111942	3900DS	112048	3900DSC	87

Baseboard Relay Control / Electronic Room Sensor Kit Option

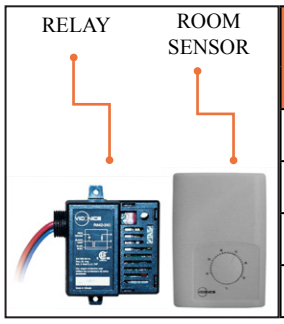

UPC 686334	MODEL	RELAY			ROOM SENSOR			LIST
		VOLTS	AMPS	POLE	VOLTS	TEMP RANGE	DIM. (LxWxD)	
112383	3900LV120T	120	22	Single	24	40°F to 90°F	3.4” x 5.0” x 1.1”	190
112390	3900LV208T	208						
112406	3900LV240T	240						
112413	3900LV277T	277						

- Unique relay design permits solid state proportional and integral temperature control via the room sensor resulting in exceptional temperature control accuracy.
- Microcomputer relay designed to substantially reduce long time delays and is not affected by heater ambient temperature conditions.
- Room sensor can be directly mounted flush to a vertical surface or standard 2” x 4” electrical mounting enclosure.
- Relay must be mounted in optional control section.

Baseboard Sections

STANDARD WHITE		COMMERCIAL BROWN		DESCRIPTION		LIST
UPC 686334	MODEL	UPC 686334	MODEL	SECTION	SIZE	
112154	39BS28	112215	39BS28C	Blank Section	28”	190
112161	39BS36	112222	39BS36C		36”	226
112178	39BS48	112239	39BS48C		48”	280
112185	39BS60	112246	39BS60C		60”	335
112192	39BS72	112253	39BS72C		72”	386
112208	39BS96	112260	39BS96C		96”	497
115094	39BS120	115100	39BS120C		120”	662
111911	3900-ICS	112017	3900-ICSC	Inside Corner	-	108
111928	3900-OCS	112024	3900-OCSC	Outside Corner		110
111935	3900-CS	112031	3900-CSC	Control Section	4” Blank	138

OUTSIDE CORNER

INSIDE CORNER

Outside and inside corner sections are 6” on longest side

Wireway Covers (White Units Only)

UPC 686334	MODEL	LENGTH	SHIP WT. (LBS)	LIST
112284	3900WW28	28”	2	41
112291	3900WW36	36”	2.5	45
112307	3900WW48	48”	3.5	54
112314	3900WW60	60”	4.5	60
112321	3900WW72	72”	5.5	64
112338	3900WW96	96”	7.5	84
115117	3900WW120	120”	7.5	113

Wireway Length Same As Baseboard Length

Dimension

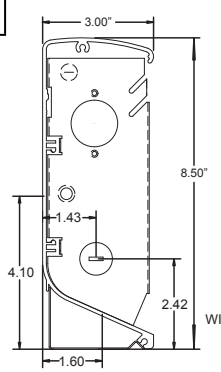

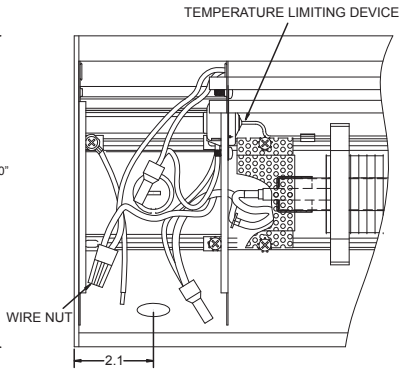

TPI Corporation TPI Corporation TPI Corporation TPI Corporation TPI Corporation TPI Corporation

2900HA Series Electric Baseboard - High Altitude Convection Heater

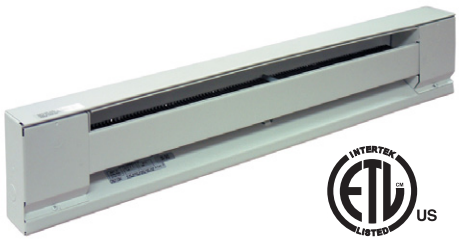

Manufactured in U.S.A.

Features

- Available in white or ivory with Aluminum heating element and Aluminum fins.
- Painted 22 Gauge steel front with 20 Gauge junction boxes located on each end of the heater - junction boxes contain quick connect cable clamps and 6” ground lead wires.
- Over-temperature thermal limit extends entire length of heated area.
- A full length wireway provided along the back of the heater.
- Optional enclosed conduit wireway available.
- Heater can be mounted to the wall by using the key hole knockouts every 4” at the back of the heater.
- Optional In-Built thermostats field installed in the junction box.
- HEIGHT - 6” DEPTH - 2 1/2”
- Ivory available with extended lead times-consult factory.

Standard Models

UPC 686334	WHITE MODEL	WATTS	BTU’s	VOLTS	AMPS	HEATER LENGTH (IN)	WT. (LBS.)	LIST
101226	E2903-024HAW	375	1275	120	3.1	24	5	57
101233	F2903-024HAW	375	1275	208	1.8			
101240	H2903-024HAW	375 / 281	1275 / 955	240 / 208	1.6/1.4			
101257	G2903-024HAW	375 / 281	1275 / 955	277 / 240	1.6/1.2			
101264	E2905-028HAW	500	1706	120	4.2	28	6	59
101271	F2905-028HAW	500	1706	208	2.4			
101288	H2905-028HAW	500 / 375	1706 / 1275	240 / 208	2.1/1.8			
101295	G2905-028HAW	500 / 375	1706 / 1275	277 / 240	1.8/1.6			
101301	E2906-036HAW	600	2040	120	5	36	7	65
101318	F2906-036HAW	600	2040	208	2.9			
101325	H2906-036HAW	600 / 450	2040 / 1530	240 / 208	2.5/2.2			
101332	G2906-036HAW	600 / 450	2040 / 1530	277 / 240	2.2/1.9			
101349	E2907-040HAW	750	2550	120	6.3	40	8	68
101356	F2907-040HAW	750	2550	208	3.6			
101363	H2907-040HAW	750 / 563	2550 / 1914	240 / 208	3.1/2.7			
101370	G2907-040HAW	750 / 563	2550 / 1914	277 / 240	2.7.2.6			
101387	E2910-048HAW	1000	3413	120	8.3	48	10	82
101394	F2910-048HAW	1000	3413	208	4.8			
101400	H2910-048HAW	1000 / 750	3413 / 2550	240 / 208	4.2/3.6			
101417	G2910-048HAW	1000 / 750	3413 / 2550	277 / 240	3.6/3.1			
101424	G2907-048HAW	750	2550	277	3.4			
101431	E2912-060HAW	1250	4250	120	10.4	60	12	102
101448	F2912-060HAW	1250	4250	208	6			
101455	H2912-060HAW	1250 / 938	4250 / 3189	240 / 208	5.2/4.5			
101462	G2912-060HAW	1250 / 938	4250 / 3189	277 / 240	4.5/3.9			
101479	G2909-060HAW	938	3189	277	3.4			
101486	E2915-072HAW	1500	5100	120	12.5	72	14	115
101493	F2915-072HAW	1500	5100	208	7.2			
101509	H2915-072HAW	1500 / 1125	5100 / 3825	240 / 208	6.3/4.7			
101516	G2915-072HAW	1500 / 1125	5100 / 3825	277 / 240	5.4/4.7			
101523	G2911-072HAW	1125	3825	277	4.1			
101578	F2920-096HAW	2000	6826	208	9.6	96	18	141
101585	H2920-096HAW	2000 / 1500	6826 / 5100	240 / 208	8.3/7.2			
101592	G2920-096HAW	2000 / 1500	6826 / 5100	277 / 240	7.2/6.3			
101608	G2915-096HAW	1500	5100	277	5.4			
101653	F2925-120HAW	2500	8532	208	12	120	22	156
101660	H2925-120HAW	2500 / 1875	8532 / 6375	240 / 208	10.4/9.0			
101677	G2925-120HAW	2500 / 1875	8532 / 6375	277 / 240	9.0/7.8			
101684	G2918-120HAW	1875	6375	277	6.8			

TPI Corporation TPI Corporation TPI Corporation TPI Corporation TPI Corporation TPI Corporation TPI Corporation

2900S Series Electric Baseboard - Stainless Steel Element Convection Heater

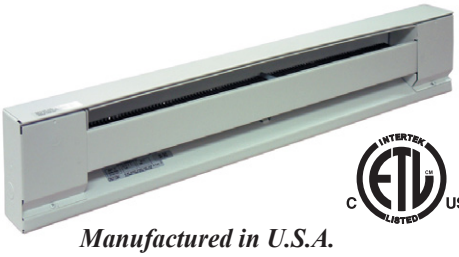

Manufactured in U.S.A.

Features

- Available in white or ivory with stainless steel heating element and Aluminum fins.
- Painted 22 Gauge steel front with 20 Gauge junction boxes located on each end of the heater - junction boxes contain quick connect cable clamps and 6"ground lead wires.
- Over-temperature thermal limit extends entire length of heated area.
- A full length wireway provided along the back of the heater - enclosed conduit available.
- Heater can be mounted to the wall by using the key hole knockouts every 4" at the back of the heater.
- Optional In-Built thermostats field installed in the junction box.
- HEIGHT - 6" DEPTH - 2 1/2"

Standard Models

UPC 686334	IVORY MODEL	UPC 686334	WHITE MODEL	WATTS	BTU's	VOLTS	AMPS	HEATER LENGTH (IN)	WT. (LBS.)	LIST
104302	E2903-024S	104999	E2903-024SW	375	1275	120	3.1	24	5	55
104319	F2903-024S	105002	F2903-024SW	375	1275	208	1.8			
104326	H2903-024S	105019	H2903-024SW	375 / 281	1275 / 955	240 / 208	1.6/1.4			
104333	G2903-024S	105026	G2903-024SW	375 / 281	1275 / 955	277 / 240	1.6/1.2			
104340	E2905-028S	105033	E2905-028SW	500	1706	120	4.2	28	6	57
104357	F2905-028S	105040	F2905-028SW	500	1706	208	2.4			
104364	H2905-028S	105057	H2905-028SW	500 / 375	1706 / 1275	240 / 208	2.1/1.8			
104371	G2905-028S	105064	G2905-028SW	500 / 375	1706 / 1275	277 / 240	1.8/1.6			
104388	E2906-036S	105071	E2906-036SW	600	2040	120	5	36	7	64
104395	F2906-036S	105088	F2906-036SW	600	2040	208	2.9			
104401	H2906-036S	105095	H2906-036SW	600 / 450	2040 / 1530	240 / 208	2.5/2.2			
104418	G2906-036S	105101	G2906-036SW	600 / 450	2040 / 1530	277 / 240	2.2/1.9			
104425	E2907-040S	105118	E2907-040SW	750	2550	120	6.3	40	8	66
104432	F2907-040S	105125	F2907-040SW	750	2550	208	3.6			
104449	H2907-040S	105132	H2907-040SW	750 / 563	2550 / 1914	240 / 208	3.1/2.7			
104456	G2907-040S	105149	G2907-040SW	750 / 563	2550 / 1914	277 / 240	2.7.2.6			
104463	E2910-048S	105156	E2910-048SW	1000	3413	120	8.3	48	10	80
104470	F2910-048S	105163	F2910-048SW	1000	3413	208	4.8			
104487	H2910-048S	105170	H2910-048SW	1000 / 750	3413 / 2550	240 / 208	4.2/3.6			
104494	G2910-048S	105187	G2910-048SW	1000 / 750	3413 / 2550	277 / 240	3.6/3.1			
104500	G2907-048S	105194	G2907-048SW	750	2550	277	3.4			
104517	E2912-060S	105200	E2912-060SW	1250	4250	120	10.4	60	12	99
103008	F2912-060S	105217	F2912-060SW	1250	4250	208	6			
103015	H2912-060S	105224	H2912-060SW	1250 / 938	4250 / 3189	240 / 208	5.2/4.5			
103022	G2912-060S	105231	G2912-060SW	1250 / 938	4250 / 3189	277 / 240	4.5/3.9			
103039	G2909-060S	105248	G2909-060SW	938	3189	277	3.4			
103046	E2915-072S	105255	E2915-072SW	1500	5100	120	12.5	72	14	113
103053	F2915-072S	105262	F2915-072SW	1500	5100	208	7.2			
103060	H2915-072S	105279	H2915-072SW	1500 / 1125	5100 / 3825	240 / 208	6.3/4.7			
103077	G2915-072S	105286	G2915-072SW	1500 / 1125	5100 / 3825	277 / 240	5.4/4.7			
103084	G2911-072S	105293	G2911-072SW	1125	3825	277	4.1			
103091	F2917-084S	105309	F2917-084SW	1750	5950	208	8.4	84	16	125
103107	H2917-084S	105316	H2917-084SW	1750 / 1313	5950 / 4464	240 / 208	7.3/6.3			
103114	G2917-084S	105323	G2917-084SW	1750 / 1313	5950 / 4464	277 / 240	6.3/5.5			
103121	G2913-084S	105330	G2913-084SW	1313	4464	277	4.7			
103138	F2920-096S	105347	F2920-096SW	2000	6826	208	9.6	96	18	138
103145	H2920-096S	105354	H2920-096SW	2000 / 1500	6826 / 5100	240 / 208	8.3/7.2			
103152	G2920-096S	105361	G2920-096SW	2000 / 1500	6826 / 5100	277 / 240	7.2/6.3			
103169	G2915-096S	105378	G2915-096SW	1500	5100	277	5.4			
103213	F2925-120S	105422	F2925-120SW	2500	8532	208	12	120	22	151
103220	H2925-120S	105439	H2925-120SW	2500 / 1875	8532 / 6375	240 / 208	10.4/9.0			
103237	G2925-120S	105446	G2925-120SW	2500 / 1875	8532 / 6375	277 / 240	9.0/7.8			
103244	G2918-120S	105453	G2918-120SW	1875	6375	277	6.8			

TPI Corporation TPI Corporation TPI Corporation TPI Corporation TPI Corporation TPI Corporation TPI Corporation

2900C Series Electric Baseboard - Heavy Duty Commercial Convection Heater

Manufactured in U.S.A.

Features

- Bankers bronze with stainless steel heating element and Aluminum fins.
- Powder coated 22 Gauge steel front with 20 Gauge junction boxes located on each end of the heater - junction boxes contain quick connect cable clamps and 6” ground lead wires.
- Standard inlet and outlet wire guards.
- Over-temperature thermal limit extends entire heated length of unit.
- A full length wireway provided along the back of the heater.
- Heater can be mounted to the wall by using the key hole knockouts every 4” at the back of the heater.
- Optional In-Built thermostats field installed in the junction box.
- HEIGHT - 6” DEPTH - 2 1/2”

Standard Models

UPC 686334	BRONZE MODEL	WATTS	BTU’s	VOLTS	AMPS	HEATER LENGTH (IN)	WEIGHT (LBS)	LIST
103831	E2903-024C	375	1275	120	3.1	24	5	126
103848	F2903-024C	375	1275	208	1.8			
103855	H2903-024C	375 / 281	1275 / 955	240 / 208	1.6 / 1.4			
103862	G2903-024C	375 / 281	1275 / 955	277 / 240	1.6 / 1.2			
103879	E2905-028C	500	1706	120	4.2	28	6	158
103886	F2905-028C	500	1706	208	2.4			
103893	H2905-028C	500 / 375	1706 / 1275	240 / 208	2.1 / 1.8			
103909	G2905-028C	500 / 375	1706 / 1275	277 / 240	1.8 / 1.6			
103916	E2906-036C	600	2040	120	5.0	36	7	180
103923	F2906-036C	600	2040	208	2.9			
103930	H2906-036C	600 / 450	2040 / 1530	240 / 208	2.5 / 2.2			
103947	G2906-036C	600 / 450	2040 / 1530	277 / 240	2.2 / 1.9			
103954	E2907-040C	750	2550	120	6.3	40	8	188
103961	F2907-040C	750	2550	208	3.6			
103978	H2907-040C	750 / 563	2550 / 1914	240 / 208	3.1 / 2.7			
103985	G2907-040C	750 / 563	2550 / 1914	277 / 240	2.7 / 2.6			
103992	E2910-048C	1000	3413	120	8.3	48	10	218
104005	F2910-048C	1000	3413	208	4.8			
104012	H2910-048C	1000 / 750	3413 / 2550	240 / 208	4.2 / 3.6			
104029	G2910-048C	1000 / 750	3413 / 2550	277 / 240	3.6 / 3.1			
104036	G2907-048C	750	2550	277	3.4			
104043	E2912-060C	1250	4250	120	10.4	60	12	261
104050	F2912-060C	1250	4250	208	6.0			
104067	H2912-060C	1250 / 938	4250 / 3189	240 / 208	5.2 / 4.5			
104074	G2912-060C	1250 / 938	4250 / 3189	277 / 240	4.5 / 3.9			
104081	G2909-060C	938	3189	277	3.4			
104098	E2915-072C	1500	5100	120	12.5	72	14	300
104104	F2915-072C	1500	5100	208	7.2			
104111	H2915-072C	1500 / 1125	5100 / 3825	240 / 208	6.3 / 4.7			
104128	G2915-072C	1500 / 1125	5100 / 3825	277 / 240	5.4 / 4.7			
104135	G2911-072C	1125	3825	277	4.1			
104142	F2917-084C	1750	5950	208	8.4	84	16	333
104159	H2917-084C	1750 / 1313	5950 / 4464	240 / 208	7.3 / 6.3			
104166	G2917-084C	1750 / 1313	5950 / 4464	277 / 240	6.3 / 5.5			
104173	G2913-084C	1313	4464	277	4.7			
104180	F2920-096C	2000	6826	208	9.6	96	18	368
104197	H2920-096C	2000 / 1500	6826 / 5100	240 / 208	8.3 / 7.2			
104203	G2920-096C	2000 / 1500	6826 / 5100	277 / 240	7.2 / 6.3			
104210	G2915-096C	1500	5100	277	5.4			
104265	F2925-120C	2500	8532	208	12.0	120	22	387
104272	H2925-120C	2500 / 1875	8532 / 6375	240 / 208	10.4 / 9.0			
104289	G2925-120C	2500 / 1875	8532 / 6375	277 / 240	9.0 / 7.8			
104296	G2918-120C	1875	6375	277	6.8			

TPI Corporation TPI Corporation TPI Corporation TPI Corporation TPI Corporation TPI Corporation TPI Corporation

Electric Baseboard - Accessories

In-Built Thermostat Kits- With Two Cover Plates

IVORY & WHITE		BRONZE		DESCRIPTION	WEIGHT (LBS)	LIST
UPC 686334	MODEL NUMBER	UPC 686334	MODEL NUMBER			
105460	TBS	102629	CTBSB	SPST-In-Built 22A @ 120-240V 18A @ 277V	1/2 lbs.	34
502702	TBS-TP	102681	CTBSB-TP	SPST-In-Built 22A @ 120-240V 18A @ 277V Tamperproof		
105477	TBD	102636	CTBDB	DPST-In-Built 22A @ 120-240V 18A @ 277V	1/2 lbs.	41
502719	TBD-TP	102698	CTBDB-TP	DPST-In-Built 22A @ 120-240V 18A @ 277V Tamperproof		

In-Built Thermostat Kits- With Thermostat Mounted to Cover Plate

UPC# 686334	MODEL NUMBER	UPC# 686334	MODEL NUMBER	THERMOSTAT MOUNTED TO COVER PLATE	WEIGHT (LBS)	LIST
115384	CTBSW	102629	CTBSB	SPST-In-Built 22A @ 120-240V 18A @ 277V	1/2 lbs.	44
115391	CTBDW	102636	CTBDB	DPST-In-Built 22A @ 120-240V 18A @ 277V	1/2 lbs.	52

Field Installed Accessories

DESCRIPTION	IVORY		WHITE		BANKERS BRONE		WEIGHT (LBS)	LIST
	UPC 686334	MODEL	UPC 686334	MODEL	UPC 686334	MODEL		
Disconnect Switch, 20 Amp, 120-277V	106108	DS	106115	DSW	106122	DSB	1 lb.	72
Corner Sections	105491	CS	105507	CSW	105514	CSB		31
1” Joiner Kits	105521	JK	105538	JKW	105545	JKB	1/4 lb.	21
6” Blank Relay Section (Relay Not Included)	105552	LVRS	105569	LVRSW	105576	LVRSB	1 1/2 lbs.	81
Receptacle Section (Baseboard Mounted) 15 Amp 120 VAC	105583	BDR115	105590	BDR115W	105606	BDR115B	1/4 lb.	21
Receptacle Section (Mounted in 6” Blank) 15 Amp 120 VAC	105613	DR115	105620	DR115W	105637	DR115B	2 lbs.	94
Transfer Switch (Mounted in 6” Blank) 16 Amp 120 VAC	105644	SR120	105651	SR120W	105668	SR120B		128
Transfer Switch (Mounted in 6” Blank) 16 Amp 240 VAC	105675	SR220	105682	SR220W	105699	SR220B		156

Optional Wireway Covers

UPC 686334	MODEL	BASEBOARD LENGTH (in.)	COVER LENGTH (in.)	WEIGHT (LBS)	LIST
105705	WWA01	24	20	1	30
105712	WWA02	28	24	1.5	33
105729	WWA03	36	32	2	36
105736	WWA04	40	36	2.5	41
105743	WWA05	48	44	3	43
105750	WWA06	60	56	4	46
105767	WWA07	72	68	5	52
105774	WWA08	84	80	6	60
105781	WWA09	96	92	7	69
105798	WWA00	120	116	8	84

Blank Sections

LENGTH	IVORY		WHITE		BANKERS BRONZE		WEIGHT (LBS)	IVORY WHITE LIST	BRONZE LIST
	UPC	MODEL	UPC	MODEL	UPC	MODEL			
24”	105804	BBS024A	105903	BBS024AW	106009	BBS024C	5	48	99
28”	105811	BBS028A	105910	BBS028AW	106016	BBS028C	5 1/2	52	108
36”	105828	BBS036A	105927	BBS036AW	106023	BBS036C	6	63	125
40”	105835	BBS040A	105934	BBS040AW	106030	BBS040C	7	68	131
48”	105842	BBS048A	105941	BBS048AW	106047	BBS048C	8	76	135
60”	105859	BBS060A	105958	BBS060AW	106054	BBS060C	10	92	187
72”	105866	BBS072A	105965	BBS072AW	106061	BBS072C	12	111	205
84”	105873	BBS084A	105972	BBS084AW	106078	BBS084C	15	116	234
96”	105880	BBS096A	105989	BBS096AW	106085	BBS096C	17	136	262
120”	105897	BBS120A	105996	BBS120AW	106092	BBS120C	20	166	330

TPI Corporation TPI Corporation TPI Corporation TPI Corporation TPI Corporation TPI Corporation TPI Corporation